International Journal of Management Research and Emerging Sciences
Vol 15, No 1, March 2025, PP. 117-134

Consumer Ethnocentrism and Green Purchase Intention: The Mediating Role of Pro-Environmental Attitude in Nepal's Sustainable Consumption

Udgam Mishra
Faculty of Management, Tribhuvan University, Biratnagar, Nepal
udgam.mishra@mmamc.tu.edu.np
Uttam Mishra
Faculty of Management, Purbanchal University, Biratnagar, Nepal

Corresponding: 1mishrauttam@gmail.com

ARTICLE INFO

Article History:
Received: 27 Oct 204
Revised: 02 Jan 2025
Accepted: 13 Mar 2025
Available Online: 24 Mar 2025

DOI:
https://doi.org/10.56536/ijmres.v15i1.753

Keywords:
Consumer ethnocentrism, Pro-environmental attitude, Green,
Purchase intention, Structural equation modelling

JEL Classification:
M31, D91, Q57, D12

ABSTRACT

Environmental sustainability interests have grown to the point where researchers now focus more intensely on the elements that influence eco-conscious consumer choices. This study examines how consumer ethnocentrism (CE) drives green purchase intention (GPI) through the mediating role of pro-environmental attitudes (PA). This study uncovers fresh perspectives on how environmentally conscious consumers base their preferences for locally made eco-conscious products on their sustainability attitudes. The research investigated hypotheses through data from 253 Nepalese consumers, collected via purposive sampling in Biratnagar, which were analyzed using structural equation modelling. The results showed that CE directly enhanced PA ($\beta = 0.370$, $p < 0.001$) and GPI ($\beta = 0.218$, $p < 0.001$), whereas PA mediated the CE-GPI relationship ($\beta = 0.140$, $p < 0.001$). Consumer ethnocentrism has a significantly positive effect on pro-environmental attitudes, leading to an increase in green purchase intentions. The findings show that consumer ethnocentrism directly influences green purchase intention through the essential role of pro-environmental attitudes as an interface mechanism. This research serves as a starting point for exploring how ethnocentrism influences green purchasing intentions through environmental awareness and contributes new perspectives to green behavioral research. According to these findings, market strategies that deliver sustainability messages through local identity elements target consumers who express national pride and succeed in effective outreach. Research on sustainable consumption and consumer behavior will expand through detailed assessments of cultural and environmental aspects in future studies.

© 2025 The authors, under a Creative Commons Attribution-Non-Commercial 4.0.

INTRODUCTION

Environmental challenges severely affect the world, as pollution kills nine million people annually (Khan & Li, 2024). The rise in consumer responsibility stems from climate change-related environmental issues, deforestation, and ocean pollution (Glavič, 2021). Consumer choices are decisive in environmental outcomes because worldwide cooperation is vital for resolving these crises. Analyzing psychological elements alongside cultural influences on consumer habits is essential for resolving environmental challenges. The constructs of consumer ethnocentrism, pro-environmental attitudes, and green purchase intentions maintain a connected chain that determines sustainable consumption practices.

Research needs to clarify whether ethnocentric attitudes help or harm green purchasing behavior because the current evidence remains incomplete. Researchers and industry professionals are advancing their understanding of green purchase behavior factors, which has become a critical priority (Yusoff et al.,

2023). Sustainable performance is the key ingredient of business success and profitability (Khan & Rehman, 2023). Environmental degradation requires immediate action to mitigate its fundamental causes, which stem from excessive consumption and waste generation (Sultana, 2023). The COVID-19 pandemic introduced lasting changes in consumer behavior by revealing supply chain weaknesses and encouraging people to buy locally sustainable products (Ferrari et al., 2023; Castillo et al., 2023). During the pandemic, consumers selected items that minimally affected the environment because they understood the importance of sustainability. Consumer behavioral transition reveals how consumer choices can serve as powerful tools to solve worldwide problems (Winterich et al., 2023).

Consumer ethnocentrism has a major impact on green purchase intentions because consumers choose sustainable products made in their home country rather than foreign products due to a combination of national loyalty and perceived environmental advantages (Bhardwaj & Adhikari, 2024). Patagonia serves as an example of this pattern since they develop their sustainable products while using local supply chain resources (Shourkaei et al., 2024). The United States production facilities of Tesla with their renewable energy solutions illustrate how nationalistic considerations help reach environmental goals (Senyapar, 2024). Consumer ethnocentrism leads to green purchases and represents the global strength of such environmental initiatives that serve essential environmental solutions. The existing literature lacks studies which use pro-environmental attitudes as mediators. The analysis of consumer ethnocentrism results helps reveal sustainability attitude changes, which provides understanding of the connection between patriotic feelings and environmental awareness during purchase decisions.

This research investigates the combined influence of consumer ethnocentrism and pro-environmental outlooks on green buying motives while demonstrating how attitudes function as intermediaries in shaping purchasing decisions. The research enables an extensive understanding of sustainable purchasing patterns between ethnocentric marketplace preferences and green purchasing objectives when consumers demonstrate pro-environmental views. Further studies should pursue a thorough examination of how pro-environmental attitudes independently motivate consumers to choose local organic produce and consequently initiate their adoption of sustainable products (Silva et al., 2025). These research investigations with their significance toward sustainable consumer practices draw strength from essential theoretical connections between these elements. Few studies in academic literature explore the relationship between consumer ethnocentrism and green purchase intention because researchers have not established the exact impact on pro-environmental attitudes. This study utilizes the Theory of Reasoned Action to explore gaps in understanding consumer ethnocentrism effects on pro-environmental attitudes leading to green purchase intentions. This study aims to answer the following central research question: How does consumer ethnocentrism interact with pro-environmental attitudes as a mechanism of green purchase intention? The paper concludes with a future outlook covering the study design, from theory development to empirical research and practical applications.

LITERATURE REVIEW

The Theory of Reasoned Action (TRA) underpins this study. According to the Theory of Reasoned Action, individual behaviors are induced by the instrumental orientations of individuals, which are derived from attitudes and subjective norms (Albarracin et al., 2001). According to Brodowsky et al. (2018), the Theory of Reasoned Action provides a reason for consumer ethnocentrism analysis, given that it states that cultural values influence the formation of attitudes that then determine behavioral intention. Consumer identification with domestically produced items tends toward environmentally supportive beliefs that support sustainability objectives. Green buying intention is positively related to customer ethnocentrism through the intervening hypothesis of pro-environmental attitudes. An environmental assessment can be considered positive only if environmentally friendly items are selected (Steg et al., 2014). Amarullah and Handriana (2023) argued that consumers who adopt a pro-environmental attitude can show ethnocentric preferences through concrete green purchasing actions. According to the TRA framework, attitudes are viewed as important determinants of intentions and behaviors.

Consumer ethnocentrism in the Nepalese scenario

Consumer ethnocentrism, rooted in cultural identity, nationalism, and economic considerations, significantly influences purchasing decisions in Nepal (Dulal, 2014). Karki and Khadka (2023) demonstrate that consumer ethnocentrism has a strong impact on purchasing behavior, noting that the effect intensifies among young adults and individuals from lower-income brackets who feel particularly ethnocentric. According to this research finding, FMCG customers are known to actively seek country-of-origin (COO) information, especially among women. Most Nepalese consumers view buying local products as dual-purpose support, assisting their economic environment, and sustaining traditional cultural heritage (Upadhaya et al., 2022). Nepalese consumer choices are influenced by both economic considerations, including how people value prices and what goods are obtainable, because numerous consumers believe local products possess at least equivalent worth as foreign items (Rokaya & Pandey, 2024). Industrial limitations, combined with Nepal's dependency on imports, create spatial and economic barriers that lead residents to believe that buying local goods supports national autonomy (Teyung, 2024).

Social influence creates powerful dynamics because families and communities universally encourage purchasing from local businesses while developing collective feelings of accountability. The rise of globalization alongside expanded access to foreign products through physical and digital stores prompts younger consumers who encounter foreign media to adopt divergent ethnocentric beliefs (Cucato et al., 2023). Consumer ethnocentrism continues to be an influential force throughout Nepalese society, pushing influence on both everyday consumer purchases and strategic economic plans and marketing approaches in Nepal. Nepal's enduring consumer ethnocentrism stems from multiple economic and socio-cultural connections. The Nepalese population residing primarily in rural areas expresses a strong preference for local products which embody authentic cultural traditions (Acharya & Halpenny, 2013). Locally made products frequently link to high-quality standards, dependable performance, and traditional methods in consumer perceptions (Cvijanović et al., 2020). Nepalese consumers strongly prefer local indigenous

products in food, textiles and handicrafts because they value both actual quality standards and sentimental ties to homegrown items.

Green purchase intention

Consumers show their green purchase intentions when choosing environmentally friendly items or solutions that produce lesser environmental impacts than conventional choices (Barbarossa & De Pelsmacker, 2016). A combination of individual, social, and economic factors affects this intention, which demonstrates consumers' growing environmental awareness and concerns. Numerous researchers from academia as well as practitioners have focused on green purchase intention because environmental issues and sustainability concerns and climate change events have grown (Zhang et al., 2018). The examination of consumer behavior depends on green purchase intention as a core measurement, which investigates how environmental perspectives, ethical standards, and population attributes modify sustainable product choices. Currently sustainable products represent an essential market factor because customers understand environmental issues better (Glavič, 2021). Users who strongly intend to buy sustainably focus on waste reduction and natural resource preservation to ensure good well-being for future generations. The combination of personal values along with the beliefs regarding altruism and ecological responsibility causes individuals to form sustainable purchase intentions that result in their selection of eco-friendly products.

Multiple recent studies in Nepal analyze environmental products based on their impact on consumer behavior and environmental attitudes. Studies demonstrate that Nepalese teenagers develop stronger readiness to buy green products because they have better knowledge of eco-friendly items and environmental protection views (Giri &Chaulagai, 2024). Sustainable purchase activity values of consumers directly influence their approach to environmentally friendly product acquisition (Chhetri & Karki, 2023). Nepalese consumers prioritizing environmentally friendly alternatives over traditional options for environmental benefit defines green purchase intention in Nepal. Green marketing tools that unite environmental beliefs, packaging branding, advertising and labelling constitute fundamental drivers for creating optimistic purchasing patterns for green products (Sharma, 2021). The willingness of Kathmandu Valley residents to pay extra for green brands alongside their attitudes toward sustainability drives purchase decisions toward environmentally-conscious brands (Bishowkarma & Lohala, 2024). The development stage of Nepal displays environmental challenges through degraded forests, degraded water systems, and emerging climate changes stemming from its diverse natural resources and ecosystems. The research shows Nepalese consumer intentions to purchase environmentally friendly products depend heavily on two factors: how aware people are about environmental issues, and how consumers perceive and how green marketing strategies affect them. Through such approaches Nepalese citizens can connect their personal lifestyle choices to environmental preservation efforts.

Consumer ethnocentrism together with pro-environmental attitudes shape how consumers make their purchasing choices (Shehawy & Khan, 2024). People with consumer ethnocentrism think first and foremost about buying items produced in their nation because they want to support their local economy and express national pride. The preference for local products matches sustainable practices since local

items transmit through decreased supply chains while producing less carbon. Different levels of emotional connection and cognitive understanding lead to varying degrees of impact between pro-environmental attitudes and actions (Cayolla et al., 2023). Global brand attitudes experience significant changes because of consumer ethnocentrism (Hong et al., 2023). People who favor buying local goods tend to form stronger eco-conscious attitudes because they assume local industry support brings ecological advantages. The research on how consumer ethnocentrism shapes product evaluation generates disagreement by showing either lowered foreign product quality assessments or domestic bias alone (Trivedi et al., 2024). Chaturvedi et al. (2024) show how consumer ethnocentrism strongly influences purchase intentions for locally produced organic food, while the extended Theory of Planned Behavior variables function as an intermediary in this relationship.

The study by Nguyen et al. (2023) reveals how CE produces negative effects on consumer perception of foreign products as well as purchase intentions directed toward these items. Consumer ethnocentrism shows a positive connection with how people intend to purchase organic foods that are made in their local markets (Chaturvedi et al., 2024). The effect of Corporate Image on purchase intention receives negative moderation from Consumer Ethnocentrism within the multinational corporate sector (Zhang et al., 2023). The theory of value-belief-norm indicates that both biospheric and collectivistic values strengthen open environmental attitudes while altruistic values impact intrinsic environmental attitudes regarding green hotel visits. Studies by Wang et al. (2023) show that hotel visitors form positive green purchase intentions because of social norms and implicit environmental attitudes together with personal norms. The analysis shows how Consumer Environmentalism affects customer behavior in different product settings across different market areas. Research findings demonstrate that consumers who display ethnocentric behavior connect locally produced items to environmental responsibility standards (Kumar & Singh, 2023). For example, in Nepal, cultural pride drives eco-friendly attitudes (Paudel et al., 2024). Thus, we propose

H1: Consumer ethnocentrism positively influences pro-environmental attitude.

Ethnocentrism not only shapes attitudes but also directly motivates sustainable purchases. Chaturvedi et al. (2024) found that CE increases green purchase intention by 27% in Southeast Asia. Therefore, we propose:

H2: Consumer ethnocentrism positively influences green purchase intention.

The essence of a pro-environmental attitude describes someone choosing behaviors that protect natural resources (Gatersleben et al., 2014). When a consumer strengthens their environmental commitment, they become more likely to demonstrate green purchasing decisions by selecting eco-friendly products. The environment-related attitudes and values of consumers demonstrate critical importance in their purchasing decisions toward green products such as electric vehicles (Shehawy & Khan, 2024). People who show strong environmental engagement toward the environment will choose products like reusable packaging and energy-efficient appliances to demonstrate their behavioral response. The development of both sustainability consciousness and environmental awareness creates critical foundations that guide purchase behaviors (Gulzar et al., 2024). People with intrinsic drive alongside satisfied basic psychological needs tend to develop stronger positive environmental attitudes together with green purchasing intentions (Wang

et al., 2024). Book a single ecotourism experience to stimulate customers to make sustainable purchases. Research supports the positive connection between environmental values alongside attitudinal patterns and purchasing choices through theoretical structures such as the theory of planned behavior together with Self-Determination Theory (Upadhyay & Kamble, 2023). Meta-analyses confirm that pro-environmental attitudes are the strongest predictors of green purchases (Vieira et al., 2025). Building on this, we hypothesize the following:

H3: Pro-environmental attitude positively influences green purchase intention.

Pro-environmental attitudes have been found to mediate the connection between climate change health risk perceptions and pro-environmental behavior (Shen et al., 2024). Ethnocentric consumers may initially prefer domestic products for cultural or economic reasons, but their pro-environmental attitudes amplify this preference, steering them toward sustainable options. Similarly, attitudes towards local products mediate the relationship between consumer ethnocentrism and consumption intention (Castillo et al., 2024). For instance, a consumer who values locally sourced organic produce because of ethnocentric tendencies may develop a pro-environmental attitude, increasing their intention to acquire ecology. Green awareness plays a significant moderating role in linking pro-environmental attitudes to green purchase intentions (Shehawy & Khan, 2024). Furthermore, green purchase intention mediates the relationship between attitudes toward green products and environmentally friendly purchasing behavior, with environmental corporate social responsibility initiatives positively moderating this mediation effect (Duong, 2023). Khan et al. (2024) argue that attitudes function as a bridge between cultural values and behavior. Applying this to CE and GPI, we propose the following hypothesis:

H4: Pro-environmental attitude mediates the relationship between consumer ethnocentrism and green purchase intention.

RESEARCH METHODOLOGY

The research design employed quantitative methods in combination with cross-sectional data types. The research employed purposive sampling as its participant selection approach. The questionnaires were distributed to 304 participants and 253 valid responses were used for analysis, giving a response rate of 83.2%. Research data was collected via direct interviews with participants located around the commercial centers in Biratnagar, Nepal. The study investigates individual consumers who evaluate their experiences with environmentally friendly and organic products. The research questions used questions drawn from Karoui and Khemakhem (2019), Fernández et al. (2020), and Mei et al. (2012) when studying consumer ethnocentrism alongside pro-environmental attitudes and green purchasing intentions. Researchers designed the instrument in the form of a questionnaire with a 1-to-5 Likert scale to measure variables for Structural Equation Modelling (SEM) analysis (Pramesti et al., 2024). The five-point Likert scale served as an assessment tool for consumer ethnocentrism and pro-environmental attitudes alongside green purchase intention since it allows participants to indicate their agreement or disagreement levels reliably (Isac et al., 2024). The selected attribute range helps respondents achieve higher precision in their answers while making the choice process easier when compared with broader measurement scales. The

reliability test used Cronbach's alpha to establish internal consistency within the instrument. The research findings established that GPI1 and GPI4 variables should be viewed together when examining green purchase intention. The elimination of one item from the green purchase intention section (GPI5) and two items from the pro-environmental attitude section (PA3 and PA4) led to better model fit.

The research applied confirmatory factor analysis to validate that the proposed model variables demonstrated convergent and discriminant validity. The analysis performed a convergent validity assessment by determining the indicator variables' factorial loadings and calculating composite reliability (CR), average variance extracted (AVE) for the model constructs. The construct discrimination validity test required a comparison of construct correlations with the square root of Average Variance Extracted (SR AVE). Statistical computations were performed by using SPSS version 24 and AMOS version 26. The hypotheses received approval or rejection through analysis performed by using Structural equation modelling (SEM). Several fit indices verified the accuracy of the developed model. For example, the relative value of the chi-square (χ^2) for the degrees of freedom (χ^2/gl), goodness-of-fit index (GFI), and comparative fit index (CFI). The mean square residual along with root mean square error of approximation (RMSEA) received estimation during the process. The AMOS 26 program performed computational analysis of these measured variables.

RESULT AND DISCUSSION

The demographic analysis indicated that the predominant respondents were male (68.8%) and aged between 18 and 45 years (86.6%), with the largest segment being 18 to 25 years (32.4%). Most participants were highly educated, with 67.7% having at least one graduate degree. In terms of income, 86.5% earned more than $1,000 per month, with 29.6% earning above $3,000. A significant proportion of respondents were single (72.3%), reflecting a youthful and independent demographic. Additionally, 75.5% of the respondents reported purchasing organic food, highlighting considerable interest in and awareness of organic products within this educated and financially stable group. Table 1 summarizes the information presented above.

Table I: Demographic samples

Demographic variable	Group	Frequency (n)	Percentage (%)
Gender	Male	174	68.8
	Female	79	31.2
Age Group	18–25 years	82	32.4
	26–35 years	64	25.3
	36–45 years	73	28.9
	46 years and above	34	13.4
Educational Level	High School or below	16	6.3
	Undergraduate degree	67	26.5
	Graduate degree	97	38.3
	Master degree	63	24.9
	Master's degree or higher	10	4

Monthly Income	Less than $500	7	2.8
	$500–$1,000	27	10.7
	$1,001–$2,000	91	36
	$2,000-$3000	53	20.9
	Above $3,000	75	29.6
Marital Status	Single	183	72.3
	Married	70	27.7
Purchase organic food?	Yes	191	75.5
	No	62	24.5

Measurement Model

The measurement and structural models constituted the two phases employed to assess the data in the study. Cronbach's alpha was used to determine the reliability of the data. Cronbach's alpha coefficients of 0.787, 0.877, and 0.870 signify data reliability for consumer ethnocentrism, pro-environmental attitudes, and green purchase intention, respectively. Fornell and Larcker (1981) stipulated three specific requirements for establishing convergent validity: (a) factor loading must exceed 0.50, (b) composite reliability must surpass 0, and (c) the average variance extracted must be more than 0.50. All factor loadings in Table 2 exceeded 0.50, with values ranging from 0.673 to 0.905. All values exceeding 0 fell within the interval of 0.829–0.904 for composite reliability. The average extracted variance for each construct ranges from 0.606 to 0.703, all exceeding 0.50, demonstrating the constructs' reliability. Discriminant validity is assessed by comparing the correlation between variables to the square root of the Average Variance Extracted (AVE). Table 3 demonstrates that discriminant validity is confirmed when the average variance extracted (AVE) for each multi-item construct passes the shared variance among the constructs.

Table II: Reliability and Validity of constructs

Construct	Item Code	Factor Loading	Cronbach's Alpha (α)	CR	AVE
Consumer ethnocentrism	CE1	0.835	0.787	0.829	0.620
	CE2	0.673			
	CE3	0.844			
Pro-environmental attitude	PA1	0.890	0.877	0.904	0.703
	PA2	0.846			
	PA3	0.905			
	PA5	0.697			
Green purchase intention	GPI1	0.725	0.870	0.881	0.606
	GPI2	0.766			
	GPI3	0.808			
	GPI4	0.814			
	GPI5	0.750			

Table 2 shows that all factor loadings were above 0.50, which is acceptable (Hair et al., 2006). Cronbach's alpha values (0.787–0.877) and composite reliability (CR) values (0.829–0.904) are above 0.70, proving that the data are reliable (Fornell & Larcker, 1981). The average variance extracted (AVE) for all constructs was above 0.50, confirming good convergent validity (Hair et al., 2006).

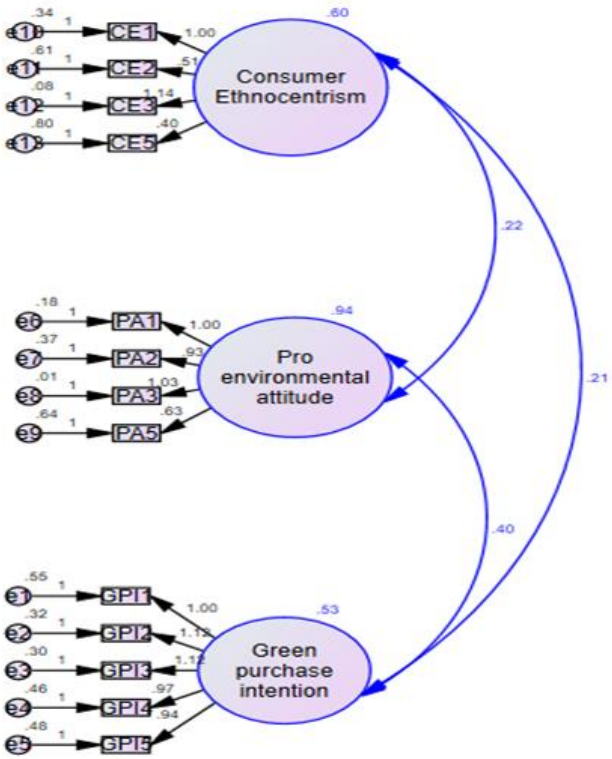

Figure 1: Confirmatory factor analysis model

Table III: Discriminant Validity

Construct	PA	GPI	CE
PA	0.849		
GPI	0.571	0.756	
CE	0.296	0.380	0.680

Table 3 confirms the discriminant validity. The square root of AVE (diagonal values) for each construct is higher than its correlations with the other constructs (below the diagonal). For example, PA (0.849) has a higher value than its correlation with CE (0.296), proving the constructs are distinct (Fornell & Larcker, 1981)

Structural model

The structural model showed a good fit: GFI = 0.909 (>0.90), CFI = 0.953 (>0.90), RMSEA = 0.076 (<0.08), and CMIN/df = 2.441 (<3), meeting all benchmarks (Hair et al., 2006). The Comparative Fit Index (CFI) was 0.953, exceeding the acceptable threshold of 0.90, hence affirming the model's adequacy. The Root Mean Square Error of Approximation (RMSEA) was 0.076, which is acceptable, signifying a robust alignment between the model and the observed data. The CMIN/df ratio was 2.441, which is within the recommended range of 1 to 3, signifying an appropriate equilibrium between the model's complexity and sample size. The combined fit indices offer compelling evidence that the structural model is appropriate for analyzing the relationship between sustainability awareness.

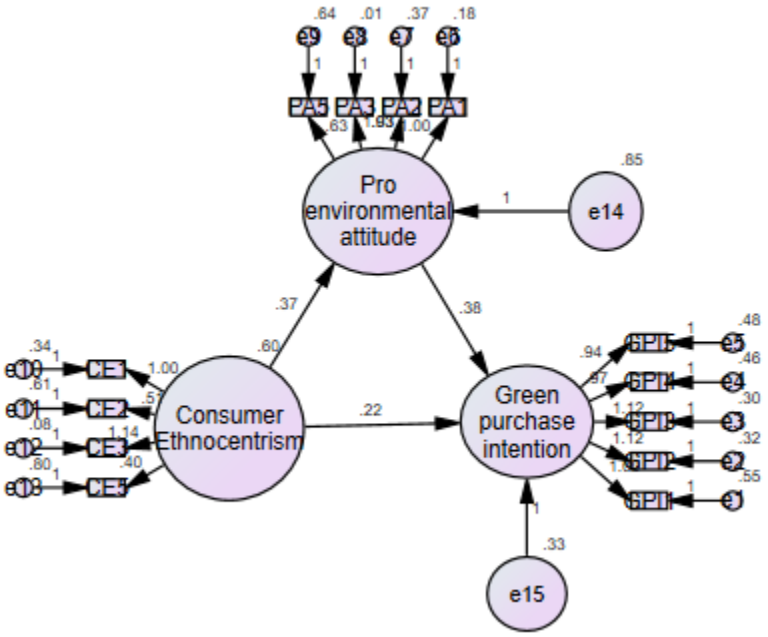

Figure 2: Measurement model results

Hypothesis testing

The results of hypothesis testing revealed significant relationships between consumer ethnocentrism (CE), pro-environmental attitude (PA), and green purchase intention (GPI). Consumer ethnocentrism positively and significantly influences pro-environmental attitudes ($\beta = 0.370$, $p < 0.001$), signifying that individuals with robust ethnocentric tendencies are expected to develop favorable attitudes toward environmental responsibility. Similarly, consumer ethnocentrism directly and significantly affects green purchase intention ($\beta = 0.218$, $p < 0.001$), demonstrating that ethnocentric consumers are more inclined to be involved in green purchasing behaviors, although with a smaller effect size than other relationships. Pro-environmental attitude also positively and significantly impacts green purchase intention ($\beta = 0.377$, $p < 0.001$), highlighting the prominence of nurturing positive environmental attitudes to initiate sustainable consumer behavior. Moreover, mediation analysis confirmed that pro-environmental attitude significantly

mediates consumer ethnocentrism and green purchase intention ($\beta = 0.140$, $p < 0.001$). This finding highlights the crucial role of pro-environmental attitudes in linking consumer ethnocentrism to green purchase intention. This emphasizes the prominence of attitude formation in promoting ecological consumption practices.

Table IV: Hypothesis summary

Hypothesis	Relation	Beta Value	T-value	P- value	Remarks
H1	CE->PA	0.370	5.12	0.0000	Accepted
H2	CE->GPI	0.218	3.45	0.0000	Accepted
H3	PA->GPI	0.377	6.01	0.0000	Accepted
H4	CE->PA->GPI	0.140	3.89	0.0000	Accepted

Table 4 shows the hypothesis results. All t-values are above 1.96 ($p < 0.05$), proving that the relationships are significant (Kline, 2015). For example, CE → PA has $t = 5.12$ ($p = 0.000$), so H1 is accepted. Similarly, CE → GPI has $t = 3.45$ ($p = 0.001$), confirming H2. H3 (PA → GPI) has ($\beta = 0.377$, $t = 6.01$, $p = 0.000$) so H3 is also accepted. The mediation effect (H4) was also significant ($t = 3.89$, $p = 0.000$). All hypotheses were supported, confirming our model (Kline, 2015).

Discussion

The research findings provide essential knowledge about the interplay between Consumer Ethnocentrism (CE), Pro-environmental Attitude (PA), and Green Purchase Intention (GPI). These studies validate initial theoretical connections while contributing to existing consumer behavior research on buyers motivated by ethnocentrism during their green purchase choices. The strong positive relationship between consumer ethnocentrism and pro-environmental attitudes indicates that ethnocentric preferences are vital factors affecting consumer perceptions of products. Specifically, this relationship stands out as a crucial aspect which needs further exploration. The study findings align with those of Filimonau et al. (2018). The study reveals that visitors adopt their home country cultural values to form environmental beliefs and behaviors. Consumers who display ethnocentrism automatically prefer home-made products above others because they believe national products possess desired values including sustainability and ecological worthiness as well as health advantages and authentic origins.

Research shows that consumer ethnocentrism produces positive effects on the intention to purchase green products. Similar research evidence emerged from Miguel et al. (2022) as well as Chaturvedi et al. (2024). Factual evidence confirms that ethnocentric values operate beyond product preferences because they shape attitudes about sustainability-related behaviors that respect the environment. The rising environmental consciousness within ethnocentric consumers allows them to recognize the environmental value of backing nearby green products as they strengthen cultural identity's impact on pro-ecological purchasing choices. This research established a strong positive connection linking pro-environmental mindset with intentions to make environmentally friendly purchases. The research produced similar findings to previous investigations reported by Rasheed et al. (2024) and Simanjuntak et al. (2023). The

research outcome reveals that buying decisions for organic products depend on consumer perceptions of their environmental benefits and ethical production, along with health advantages. The mediating role of perceived attributes in the association between consumer ethnocentrism and green purchase intention further enriches our understanding of the interplay between the two constructs. This significant mediation effect suggests that consumer ethnocentrism indirectly influences green purchase intentions by enhancing perceived product attributes. This result underlines the implication of a pro-environmental attitude as a critical mechanism for translating ethnocentric values into green purchasing behavior.

CONCLUSION AND POLICY IMPLICATION

Conclusion

The study examines the influence of consumer ethnocentrism on green purchase intention through its effect on pro-environmental attitudes. The strength of consumer ethnocentrism directly shapes people is buying decisions for environmentally friendly goods while pro-environmental attitudes serve to strengthen this relationship. Environmental product consumers with high ethnocratic views demonstrate greater environmentally friendly purchasing behavior when they hold favorable environmental beliefs. These results demonstrate that pro-environmental beliefs play an essential role, which enables ethnocentric attitudes to convert into sustainable consumer behavior. This study shows cultural aspects, especially consumer ethnocentrism, need detailed examination when creating plans for marketing green products. Sustainable product adoption requires marketers to inform ethnocentric buyers about environmental conditions, so they select environment-friendly options. Market opportunities exist for marketers to run specific advertising campaigns promoting environmentally friendly local products because these campaigns boost national endorsement and cultural support, and environmental initiatives. The research merges consumer ethnocentrism with pro-environmental attitudes to advance existing understanding of green consumer behavior while presenting creative perspectives about environmental and cultural influences on buying choices. The model provides researchers with a framework option for continued sustainable consumption research, which future studies should investigate social identity and environmental consciousness and trust-related psychological factors.

Policy Implications

The research findings lead authorities, environmental groups and lawmakers toward establishing responsible consumption methods. Educational initiatives need to become the initial approach because they educate people about environmental issues and green product benefits. The awareness initiatives should connect personal buying habits with worldwide ecological threats while showing ethnocentric people that sustainable habits benefit both economic and ecological aspects of the country. Government entities should integrate tax benefits with financial incentives for both green products made locally and domestic green buying habits, combined with support systems for small environmentally beneficial businesses. Government-implemented measures decrease costs and broaden availability of sustainable products, which supports ethnic buyers to access them culturally. Government leaders must include environmental education in school learning programs to create positive environmental mindsets in young

people since their formative years. These programs assist people to meet their environmental responsibilities for national sustainability targets so they can experience pride from their beneficial impact on the environment. Such strategies target ethnocentric groups.

The regulatory standards need to include labeling requirements, which guarantee clear product information for consumer education. Locally produced and environmentally friendly products get increased consumer demand when they have visible labeling which appeals to both ethnocentric consumers and those who value environmental protection. A united strategy for sustainable consumption can be established through governmental partnerships with business entities and non-governmental organizations (NGOs). When business organizations conduct joint environmental protection initiatives with local industry advocacy campaigns, they can successfully lure ethnocentric consumers towards green products. Stakeholders who respond to these policy requirements can maximize the connection between consumer ethnocentrism and pro-environmental attitudes for establishing sustainable consumption progress. By using this integrated method, all cultural aspects and environmental considerations receive proper consideration to develop a sustainable future.

Limitation and Future Direction

This investigation provides essential data. Nonetheless, it possesses limitations. The research sample was confined to a certain geographical area, potentially failing to represent the wider customer demographic accurately. Future studies should consider diversifying the sample to include diverse ethnical contexts, thereby enhancing the generalizability of the results. Second, the cross-sectional nature of the data collection confines the ability to draw connecting implications. Longitudinal studies would offer a stronger understanding of how ethnocentrism and pro-environmental attitudes progress over time and influence green purchase intentions. Furthermore, while the study focuses on ethnocentrism as a cultural factor, other cultural dimensions, such as collectivism versus individualism, may also influence green purchase intentions. Exploring these factors could offer a broader perspective on the cultural influences on sustainable consumption. Regarding future directions, researchers could expand the investigation to explore additional psychological, social, and cultural variables that may influence green purchase intentions. For example, social norms, environmental education, and consumer trust in sustainable brands could deliver a profound understanding of the mechanisms. Furthermore, inspecting the role of digital platforms and social media in shaping pro-environmental attitudes and behaviors could open new avenues for promoting green products in the digital age.

REFERENCES

Acharya, B. P., & Halpenny, E. A. (2013). Homestays as an alternative tourism product for sustainable community development: A case study of women-managed tourism product in rural Nepal. *Tourism Planning & Development, 10*(4), 367-387. https://doi.org/10.1080/21568316.2013.779313

Albarracin, D., Johnson, B. T., Fishbein, M., & Muellerleile, P. A. (2001). Theories of reasoned action and planned behavior as models of condom use: a meta-analysis. *Psychological Bulletin, 127*(1), 142. https://doi.org/10.1037/0033-2909.127.1.142

Amarullah, D., & Handriana, T. (2023). Utilization of Theory of Planned Behavior to Predict Consumer Behavioral Intention toward "Buy-Local" Campaign: Do National Identity Expressions Matter?. *Journal Of International Consumer Marketing, 35*(5), 526-541. https://doi.org/10.1080/08961530.2022.2150735

Barbarossa, C., & De Pelsmacker, P. (2016). Positive and negative antecedents of purchasing eco-friendly products: A comparison between green and non-green consumers. *Journal of Business Ethics, 134*, 229-247. https://doi.org/10.1007/s10551-014-2425-z

Bhardwaj, S., & Adhikari, K. (2024). Drivers of brand love for organic wine brands: moderating role of ethnocentrism. *Marketing Intelligence & Planning*. https://doi.org/10.1108/MIP-02-2024-0088

Bishowkarma, R., & Lohala, R. (2024). Attitude towards Green Brands and Green Purchase Intention: Moderating Role of Willingness to Pay Premium among Consumers in Kathmandu Valley. *SAIM Journal of Social Science and Technology, 1*(1), 41-52. https://doi.org/10.70320/sacm.2024.v01i01.004

Brodowsky, G., Stewart, K., & Anderson, B. (2018). Brand and country influences on purchase intentions: a theory-of-reasoned action approach. *Journal Of Promotion Management, 24*(2), 251-269. https://doi.org/10.1080/10496491.2017.1360822

Cayolla, R., Escadas, M., McCullough, B. P., Biscaia, R., Cabilhas, A., & Santos, T. (2023). Does pro-environmental attitude predicts pro-environmental behavior? Comparing sustainability connection in emotional and cognitive environments among football fans and university students. *Heliyon, 9*(11). https://doi.org/10.1016/j.heliyon.2023.e21758

Chaturvedi, P., Agnihotri, D., & Tripathi, V. (2024). Exploring the role of consumer ethnocentrism in predicting the purchase intention for locally produced organic food in an emerging market. *British Food Journal, 126*(2), 738-757. https://doi.org/10.1108/BFJ-04-2023-0323

Chhetri, A. D., & Karki, D. (2023). Consumers' Attitude on Purchase Behavior of Green Products. *Pravaha, 29*(1), 111-122. https://doi.org/10.3126/pravaha.v29i1.71411

Cucato, J. D. S., Bizarrias, F. S., Strehlau, V. I., Rocha, T., & Silva, D. (2023). Xenocentrism, ethnocentrism, and global culture influence on consumer preference for global and local brands. *Journal of International Consumer Marketing, 35*(3), 351-366. https://doi.org/10.1080/08961530.2022.2109231

Cvijanović, D., Ignjatijević, S., Vapa Tankosić, J., & Cvijanović, V. (2020). Do local food products contribute to sustainable economic development?. *Sustainability, 12*(7), 2847. https://doi.org/10.3390/su12072847

Silva de, M. J. B., de Lima, M. I. C., dos Santos, M. D., da Silva Santos, A. K., da Costa, M. F., Melo, F. V. S., & de Farias, S. A. (2025). Exploring the Interplay Among Environmental Knowledge, Green Purchase Intention, and Pro-Environmental Behavior in Greenfluencing Scenarios: The Mediating Effect of Self-Congruity. *Sustainable Development*. https://doi.org/10.1002/sd.3343

Dulal, S. (2014). The effect of country-of-origin image on consumer's purchase behavior in context of Nepal, *Master's thesis, Universitetet i Nordland.* https://scholar.google.com/scholar?hl=en&as_sdt=0%2C5&q=Dulal%2C+S.+%282014%29.+The+effect+of+country-of-

origin+image+on+consumer%27s+purchase+behavior+in+context+of+Nepal+%28Master%27s+thesis%2C+Universitetet+i+Nordland%29.&btnG=

Duong, C. D. (2023). Environmental corporate social responsibility initiatives and the attitude-intention-behavior gap in green consumption. *Social Responsibility Journal, 20*(2), 305-325. https://doi.org/10.1108/SRJ-11-2022-0487

Senyapar, D, H. N. (2024). Electric Vehicles in the Digital Discourse: A Sentiment Analysis of Social Media Engagement for Turkey. *SAGE Open, 14*(4), 21582440241295945. https://doi.org/10.1177/21582440241295945

Fernández, M., Cebrián, G., Regadera, E., & Fernández, M. Y. (2020). Analysing the relationship between university students' ecological footprint and their connection with nature and pro-environmental attitude. *International Journal of Environmental Research and Public Health, 17*(23), 8826. https://doi.org/10.3390/ijerph17238826

Ferrari, A. A., Bogner, K., Palacio, V., Crisostomo, D., Seeber, N., & Ebersberger, B. (2023). The COVID-19 pandemic as a window of opportunity for more sustainable and circular supply chains. *Cleaner Logistics and Supply Chain, 7*, 100101. https://doi.org/10.1016/j.clscn.2023.100101

Filimonau, V., Matute, J., Mika, M., & Faracik, R. (2018). National culture as a driver of pro-environmental attitudes and behavioural intentions in tourism. *Journal of Sustainable Tourism, 26*(10), 1804-1825. https://doi.org/10.1080/09669582.2018.1511722

Fornell, C., & Larcker, D. F. (1981). Evaluating structural equation models with unobservable variables and measurement error. *Journal of Marketing Research, 18*(1), 39-50. https://doi.org/10.1177/0022243781018001

Gatersleben, B., Murtagh, N., & Abrahamse, W. (2014). Values, identity and pro-environmental behaviour. *Contemporary Social Science, 9*(4), 374-392. https://doi.org/10.1080/21582041.2012.682086

Giri, A., & Chaulagai, T. R. (2024). Enhancing sustainable agriculture through innovative packaging: consumer preferences and willingness to pay in the Nepalese market. *Cogent Food & Agriculture, 10*(1), 2399793. https://doi.org/10.1080/23311932.2024.2399793

Glavič, P. (2021). Evolution and current challenges of sustainable consumption and production. *Sustainability, 13*(16), 9379. https://doi.org/10.3390/su13169379

Gulzar, Y., Eksili, N., Koksal, K., Celik Caylak, P., Mir, M. S., & Soomro, A. B. (2024). Who Is Buying Green Products? The Roles of Sustainability Consciousness, Environmental Attitude, and Ecotourism Experience in Green Purchasing Intention at Tourism Destinations. *Sustainability, 16*(18), 7875. https://doi.org/10.3390/su16187875

Hair, J. F., Black, W. C., Babin, B. J., Anderson, R. E., & Tatham, R. L. (2006). Multivariate data analysis (Vol. 6). Pearson. https://thuvienso.hoasen.edu.vn/handle/123456789/10308?locale-attribute=vi

Hong, E., Park, J., Jaroenwanit, P., Siriyota, K., & Sothonvit, A. (2023). The effect of customer ethnocentrism and customer participation on global brand attitude: *The perspective of Chinese*

customer. Journal of Retailing and Consumer Services, 70, 103167. https://doi.org/10.1016/j.jretconser.2022.103167

Isac, N., Javed, A., Radulescu, M., Cismasu, I. D. L., Yousaf, Z., & Serbu, R. S. (2024). Is greenwashing impacting green brand trust and purchase intentions? Mediating role of environmental knowledge. *Environment, Development and Sustainability*, *1*-18. https://doi.org/10.1007/s10668-023-04352-0

Karki, D., & Khadka, U. (2023). Nexus Between Consumer Ethnocentrism and Purchase Intentions. *Interdisciplinary Journal of Innovation in Nepalese Academia*, *2*(2), 217-232. https://doi.org/10.3126/idjina.v2i2.59501

Karoui, S., & Khemakhem, R. (2019). Consumer ethnocentrism in developing countries. *European Research on Management and Business Economics, 25*(2), 63-71. https://doi.org/10.1016/j.iedeen.2019.04.002

Khan, M. H., & Jin, J. (2024). The relationship between ethnocentric behaviour and workforce localisation success: The mediating role of knowledge sharing tendency. *European Research on Management and Business Economics, 30*(2), 100245. https://doi.org/10.1016/j.iedeen.2024.100245

Khan, S., & Rehman, S. (2023). Entrepreneurial Agility: A key to notch 'Sustainable Business Performance'in IT-enterprises of Pakistan. *International Journal of Management Research and Emerging Sciences, 13*(3). https://doi.org/10.56536/ijmres.v13i3.514

Khan, Y., & Li, X. (2024). The role of environmental mitigation technology and energy productivity in reducing air pollution-related premature deaths: insights from the top 20 polluted economies. Air Quality, Atmosphere & Health, 1-19. https://doi.org/10.1007/s11869-024-01674-4

Kline, R. B. (2015). Principles and Practice of Structural Equation Modeling. (4th ed.). *Guilford* https://psycnet.apa.org/record/2015-56948-000

Kumar, A., & Singh, R. (2023). The role of cultural identity in shaping green consumption: A cross-national study. *Journal of Consumer Behaviour, 22*(4), 567-582. https://doi.org/10.3390/su15086426

Mei, O. J., Ling, K. C., & Piew, T. H. (2012). The antecedents of green purchase intention among Malaysian consumers. Asian Social Science, 8(13), 248. https://doi.org/10.5539/ass.v8n13p248

Miguel, L., Marques, S., & Duarte, A. P. (2022). The influence of consumer ethnocentrism on purchase of domestic fruits and vegetables: application of the extended theory of planned behaviour. *British Food Journal*, *124*(13), 599-618. https://doi.org/10.1108/BFJ-11-2021-1208

Nguyen, N. H., Dao, T. K., Duong, T. T., Nguyen, T. T., Nguyen, V. K., & Dao, T. L. (2023). Role of consumer ethnocentrism on purchase intention toward foreign products: Evidence from data of Vietnamese consumers with Chinese products. *Heliyon*, *9*(2). https://doi.org/10.1016/j.heliyon.2023.e13069

Paudel, R., Yedgarian, V. A., Ahmed, M. F., Hasan, M. J., & Koirala, R. K. (2024). Evaluating green initiatives: Advancing environmental responsibility in global business operations. *Canadian Journal of Research, Society and Development*, *1*(2), 43-60. https://doi.org/10.62910/crsdv1i2a47

Pramesti, A. R., Saputra, A. R. P., & Suprapto, Y. L. (2024). Digital Marketing, Social Media Marketing, and Brand Trust on The Intention as Strategic to Buy Local Indonesian Brand Products. *International Journal of Management Research and Emerging Sciences*, *14*(4). https://doi.org/10.56536/ijmres.v14i4.677

Rasheed, N., Sabir, R. I., Mahmood, H., Rauf, A., Ibrahim, A. M., & Naseem, W. (2024). Impact of pro-environmental values on sustainable green apparel buying behavior in Pakistan. *Cleaner and Responsible Consumption*, *12*, 100180. https://doi.org/10.1016/j.clrc.2024.100180

Rokaya, A., & Pandey, A. (2024). Impact of COVID-19 Pandemic on Consumer Buying Behavior of Organic Products in Surkhet Valley, Nepal. *The International Research Journal of Management Science*, *9*(1), 103-118. https://doi.org/10.3126/irjms.v9i1.72718

Castillo, S, E. J., Díaz Armas, R. J., & Gutiérrez Taño, D. (2023). Are Local Product Consumption Habits Influenced by Extreme Situations? A Case Study of Wine During the COVID-19 Pandemic. *SAGE Open*, *13*(3), 21582440231193216. https://doi.org/10.1177/21582440231193216

Sharma, A. P. (2021). Consumers' purchase behaviour and green marketing: A synthesis, review and agenda. *International Journal of Consumer Studies*, *45*(6), 1217-1238. https://doi.org/10.1111/ijcs.12722

Shehawy, Y. M., & Khan, S. M. F. A. (2024). Consumer readiness for green consumption: The role of green awareness as a moderator of the relationship between green attitudes and purchase intentions. *Journal of Retailing and Consumer Services*, *78*, 103739. https://doi.org/10.1016/j.jretconser.2024.103739

Shen, T., Rasdi, I. B., Ezani, N. E. B., & San, O. T. (2024). The mediating role of pro-environmental attitude and intention on the translation from climate change health risk perception to pro-environmental behavior. *Scientific Reports*, *14*(1), 9831. https://doi.org/10.1038/s41598-024-60418-7

Shourkaei, M. M., Taylor, K. M., & Dyck, B. (2024). Examining sustainable supply chain management via a social-symbolic work lens: Lessons from Patagonia. *Business Strategy and the Environment*, *33*(2), 1477-1496. https://doi.org/10.1002/bse.3552

Simanjuntak, M., Nafila, N. L., Yuliati, L. N., Johan, I. R., Najib, M., & Sabri, M. F. (2023). Environmental care attitudes and intention to purchase green products: Impact of environmental knowledge, word of mouth, and green marketing. *Sustainability*, *15*(6), 5445. https://doi.org/10.3390/su15065445

Steg, L., Bolderdijk, J. W., Keizer, K., & Perlaviciute, G. (2014). An integrated framework for encouraging pro-environmental behaviour: The role of values, situational factors and goals. *Journal of Environmental psychology*, *38*, 104-115. https://doi.org/10.1016/j.jenvp.2014.01.002

Sultana, F. (2023). Whose growth in whose planetary boundaries? Decolonising planetary justice in the Anthropocene. *Geo: Geography and Environment*, *10*(2), e00128. https://doi.org/10.1002/geo2.128

Teyung, N. B. (2024). Analyzing the Role of Myanglung Bazar in Promoting Local Agricultural Products. *Intellectual Journal of Academic Research, 2*(1), 61-71. https://doi.org/10.3126/ijar.v2i1.72802

Trivedi, S. D., Tapar, A. V., & Dharmani, P. (2024). A systematic literature review of the relationship between consumer ethnocentrism and product evaluation. *Journal of International Consumer Marketing, 36*(1), 41-61. https://doi.org/10.1080/08961530.2023.2180790

Upadhaya, S., Tiwari, S., Poudyal, B., Godar Chhetri, S., & Dhungana, N. (2022). Local people's perception of the impacts and importance of ecotourism in Central Nepal. *PloS one, 17*(5), e0268637. https://doi.org/10.1371/journal.pone.0268637

Upadhyay, N., & Kamble, A. (2023). Examining Indian consumer pro-environment purchase intention of electric vehicles: Perspective of stimulus-organism-response. *Technological Forecasting and Social Change, 189*, 122344. https://doi.org/10.1016/j.techfore.2023.122344

Vieira, V. A., Araújo, C. F., & Groening, C. (2025). EXPRESS: The predictor role of perceived consumer effectiveness and environmental concern in consumer green behavior: A meta-analysis with cultural-level moderators. *Journal of International Marketing, 0*(ja). https://doi.org/10.1177/1069031X251316551

Wang, C. P., Zhang, Q., Wong, P. P. W., & Wang, L. (2023). Consumers' green purchase intention to visit green hotels: A value-belief-norm theory perspective. *Frontiers in psychology, 14*, 1139116. https://doi.org/10.3389/fpsyg.2023.1139116

Wang, Y., Zhao, J., & Pan, J. (2024). The investigation of green purchasing behavior in China: a conceptual model based on the theory of planned behavior and self-determination theory. *Journal of Retailing and Consumer Services, 77*, 103667. https://doi.org/10.1016/j.jretconser.2023.103667

Winterich, K. P., Reczek, R. W., & Bollinger, B. (2023). Reducing emissions across the consumption cycle and an agenda for future research on consumers and climate change: Introduction to the special issue on climate change. *Journal of the Association for Consumer Research, 8*(3), 237-242. https://www.journals.uchicago.edu/doi/full/10.1086/724997

Yusoff, N., Alias, M., & Ismail, N. (2023). Drivers of green purchasing behaviour: a systematic review and a research agenda. *F1000Research, 12*. https://doi.org/10.12688/f1000research.140765.1

Zhang, L., Li, D., Cao, C., & Huang, S. (2018). The influence of greenwashing perception on green purchasing intentions: The mediating role of green word-of-mouth and moderating role of green concern. *Journal of cleaner production, 187*, 740-750. https://doi.org/10.1016/j.jclepro.2018.03.201

Zhang, Z., Yang, Z., Gu, J., & Kim, M. S. (2023). How does multinational corporations' CSR influence purchase intention? The role of consumer ethnocentrism and consumer ambivalence. *Sustainability, 15*(7), 5908. https://doi.org/10.3390/su15075908